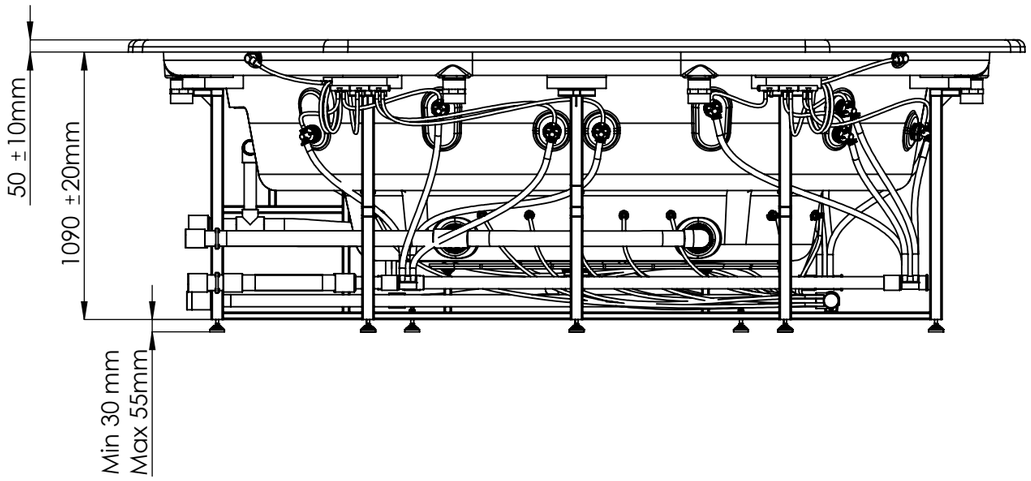


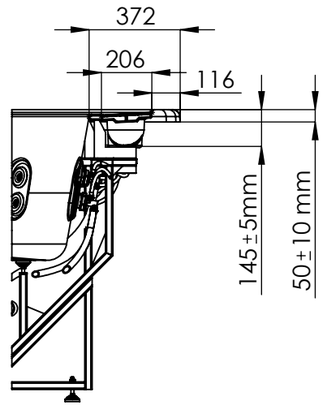


**D-D** (1 : 25)

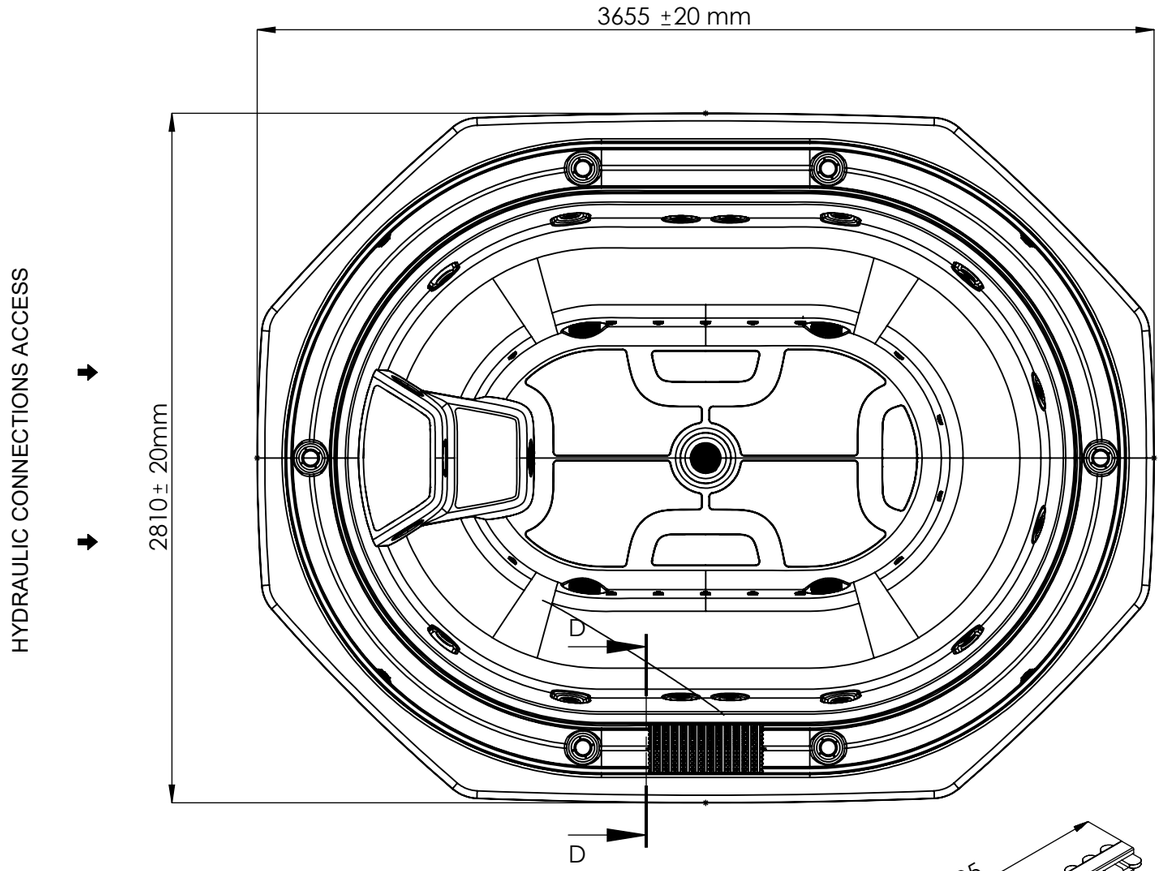


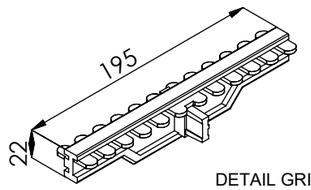


DETAIL GRID
SCALE 1:4

According to our policy of continuous improvement, dimensions, features or components of this product can be partially or completely changedwithout prior notice.
It's Customer responsibility to verify that this is the last version of the drawing

| Change No. | Date | Name | Modification |
|---|---|---|---|
| | | | |
| | | | |
| | | | |
| | | | |
| | | | |

Remarks
Dimensions in mm. General Tolerances +/- 10mm

COMMERCIAL

| | | |
|---|---|---|
| Drawn | C.Fernandez | 09/07/2020 |
| Checked | X.Codina | 09/07/2020 |
| Scale 1:25 | General Tolerance DIN 7168 ISO 2768g | |
| Sheet 1/3 | | |

IBERSPA

| Part Number | Rev. | First Angle Projection |
|---|---|---|
| 73587<br>73589 | 00 | |

Property of IBERSPA S.L. Avda. Plà d'Urgell 2-8 25200 Cervera, Spain. Don't use without permission. Keep this information confidential and use it solely for the permitted purpose.

| | | 73589 | 73587 |
|---|---|---|---|
| A | Suction-Water Massage Pump 1 | 2"BSP FEMALE THREAD | ∅63mm FEMALE SOCKET |
| B | Suction-Water Massage Pump 2 | 2"BSP FEMALE THREAD | ∅63mm FEMALE SOCKET |
| C | Return-Water Massage Pump 1 | 2"BSP FEMALE THREAD | ∅63mm FEMALE SOCKET |
| D | Return-Water Massage Pump 2 | 2"BSP FEMALE THREAD | ∅63mm FEMALE SOCKET |
| E | Return-Air Massage | 2"BSP FEMALE THREAD | ∅63mm FEMALE SOCKET |
| F | Suction/Return-Filtration Pump Bottom Spa | 2"BSP FEMALE THREAD | ∅63mm FEMALE SOCKET |
| G | Return-Filtration Pump Inlets (1x) | 2"BSP FEMALE THREAD | ∅63mm FEMALE SOCKET |
| H | Overflow Drains | 2'5"BSP FEMALE THREAD | ∅75mm FEMALE SOCKET |
| I | Light (Optional) | Optional | Optional |

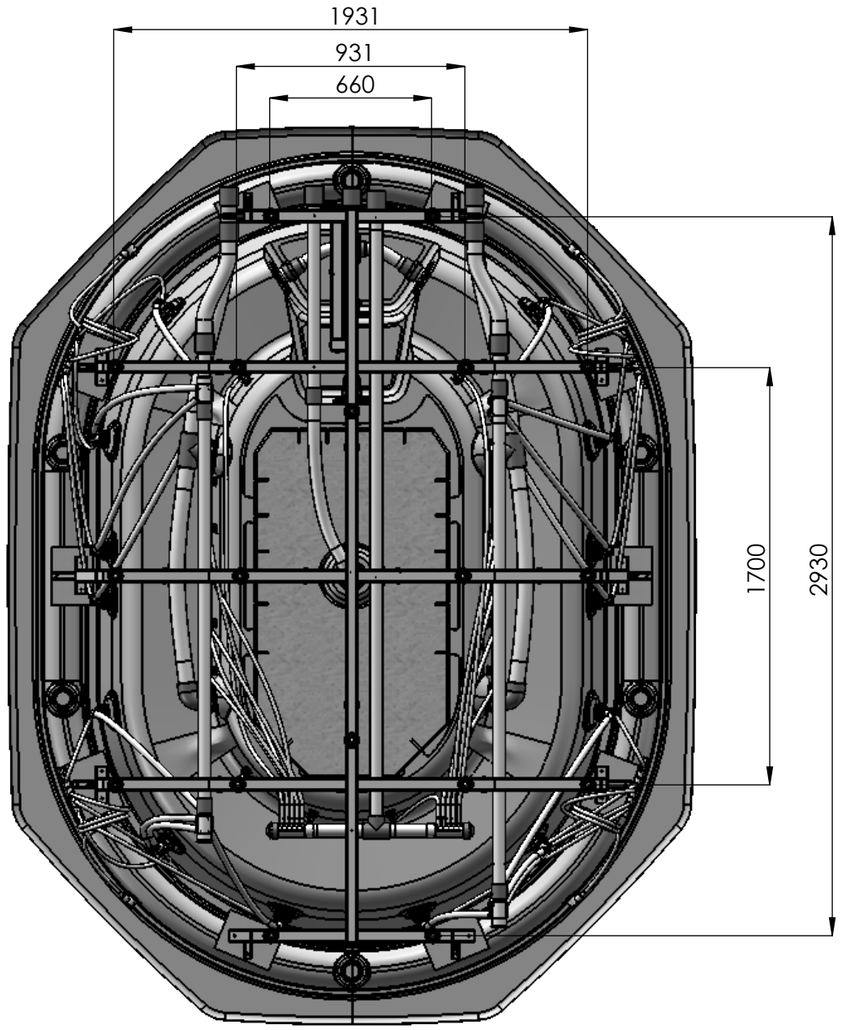


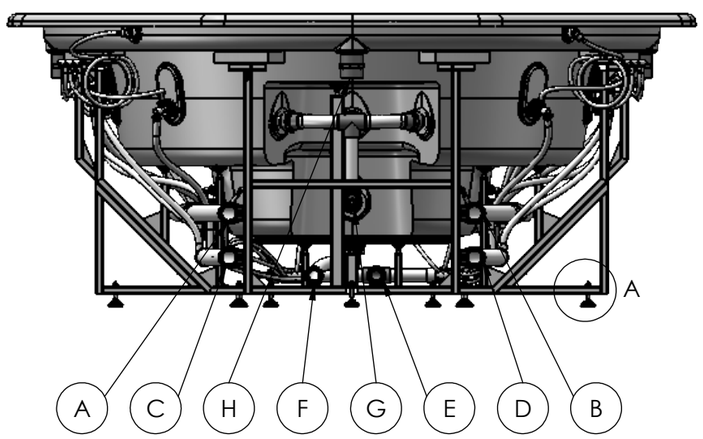


**A (1 : 5)**

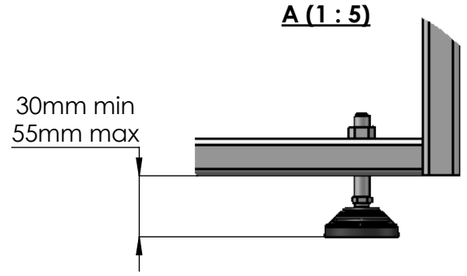


**WARNING:**
It's essential to keep a minimum clearance access of **700mm** all around.
Minimum depth of spa hole **940** mm.

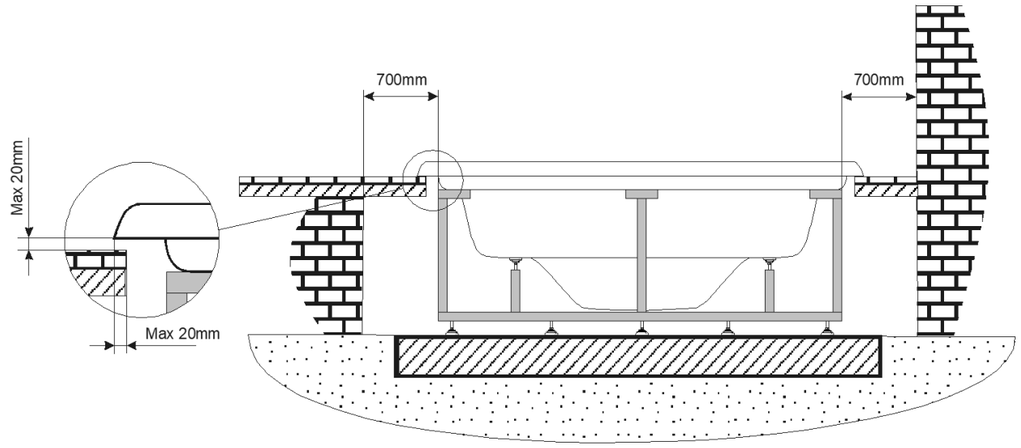


According to our policy of continuous improvement, dimensions, features or components of this product can be partially or completely changedwithout prior notice.
It's Customer responsibility to verify that this is the last version of the drawing

| Change No. | Date | Name | Modification |
|---|---|---|---|
| | | | |
| | | | |
| | | | |
| | | | |
| | | | |

Remarks
Dimensions in mm. General Tolerances +/- 10mm

COMMERCIAL

| | | |
|---|---|---|
| Drawn | C.Fernandez | 09/07/2020 |
| Checked | X.Codina | 09/07/2020 |
| Scale 1:25 | General Tolerance DIN 7168 ISO 2768g | |
| Sheet 2/3 | | |

IBERSPA

Part Number 73587 73589

Rev. 00

First Angle Projection

Property of IBERSPA S.L. Avda. Plà d'Urgell 2-8 25200 Cervera, Spain. Don't use without permission. Keep this information confidential and use it solely for the permitted purpose.