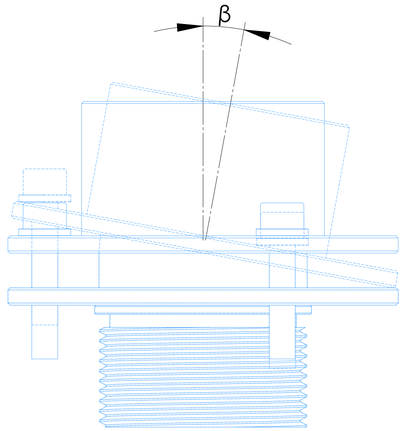
β

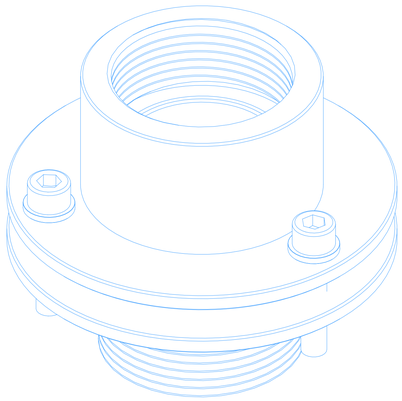

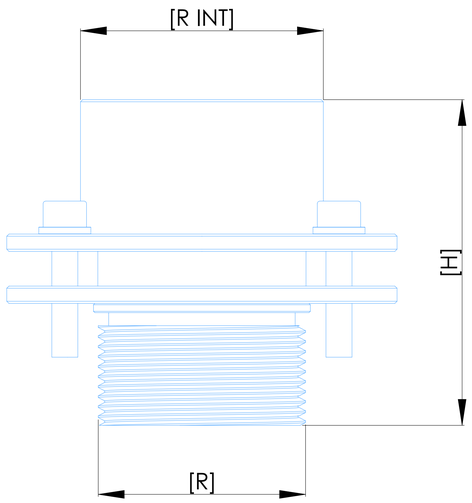
[R INT]
[H]
[R]

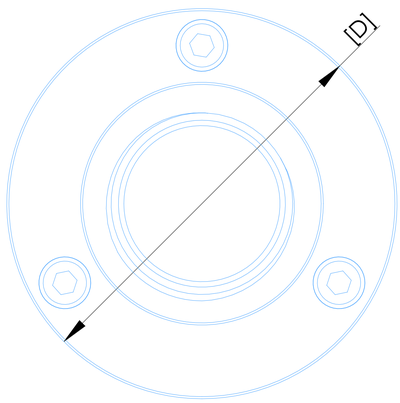
[D]